RM12 RV touch control panel

User Manual

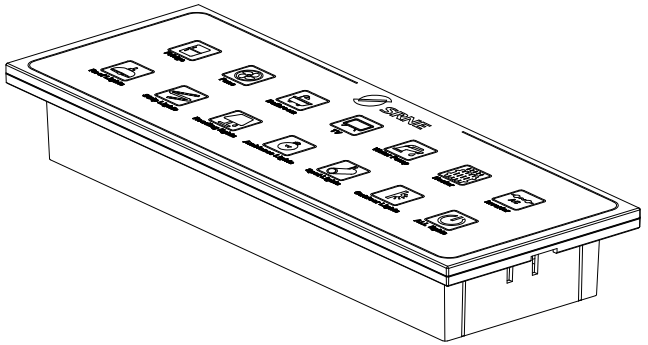

Code：114123

Manual version: V1.0 Subject to change without notice

Dear user:

Thank you very much for choosing our product

Safety instructions

Warning: Electric shock that may damage devices or electrocution/injury if it is not avoided.

Caution: Potential dangers that may damage devices if they are not avoided.

Caution: Potential dangers that may damage devices if they are not avoided.

Note: Important notices in operation that may trigger the device fault alarm if they are not performed.

Contents

1、Product Overview ---------- 03
2、Product Features ---------- 03
3、Product List ---------- 03
4、Installation Instructions ---------- 04
5、Specification Parameter Table ---------- 05
6、main switch Usage ---------- 05
7、Indicator status ---------- 07
8、Common Problems and Solutions ---------- 07
9、Recommendations and precautions for use ---------- 08

1. Product Overview

The RM12 touch control panel is a multi-channel DC load switch designed specifically for RVs. This product, when paired with the DC distribution box DB 12, enables switching of 12 DC loads in an RV, remote switching of 1 inverter, and features 1 configurable master switch that allows for one-touch operation to switch on or off any of the 1 to 12 DC loads.

Each switch on the RM12 touch control panel is equipped with a status indicator LED. It displays a blue light when normal and a red light when there is a fault. It also features a sleep mode, which turns off all LED indicators without changing the switch status. A short press on any touch switch can wake it up.

2.Product Features

♦14-way touch switch with LED status indication

♦12-way RV DC load distribution switch, 1-way inverter switch, 1-way main switch.

♦The master switch supports (configured via the APP) association with any channel from 1 to 12.

♦The LED indicator can display fault statuses such as overcurrent, overvoltage, and overdischarge of DB12.

♦Uses standard RJ45 interface for RS485 communication.

♦The communication line can be powered without the need for external separate power supply.

♦Embedded installation, simple and convenient.

3.Product list

Name	Quantities
Touch panel	1 pcs
Fixed plate	1 pcs
Communication line	1 pcs
Instruction manual	1 pcs
Install screws	4 pcs

4.Installation instructions

Product size: 209mm*74.5mm*29.4mm

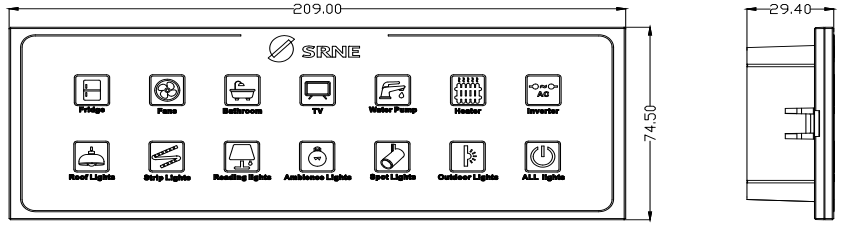

Backplane opening size: 190*64.5mm

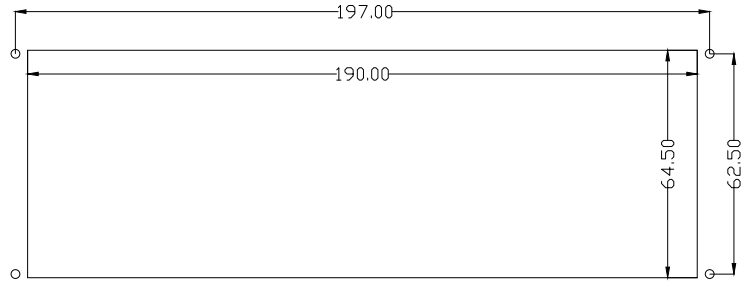

1. Cut a groove hole of 190*64.5mm in the appropriate installation location;
2. Remove the installation fixing plate from the back of RM12;
3. Fit the mounting fixing plate into the slotted hole made in step 1 and fix it with 4 self-tapping screws;
4. Connect the communication cable to the RJ45 port on the back of RM12;
5. Embed RM12 into the fixing plate for installation, please pay attention to the direction of installation, do not up and down the installation of the opposite

The installation diagram is as follows:

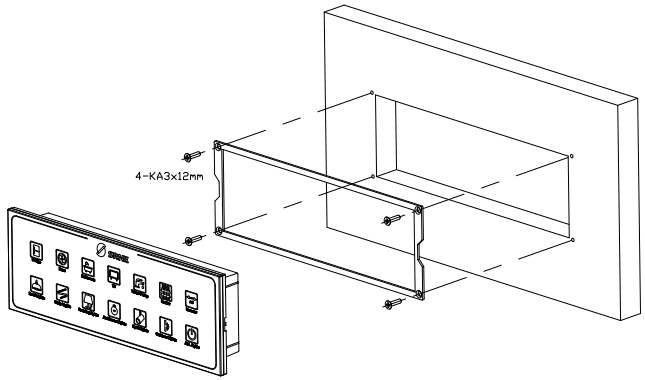

Wiring diagram:
RM12 is connected to the [RS485] communication port of the distribution box DB12 via RS485 communication lines, as shown in the diagram below. For the wiring of other parts of DB12, please refer to the user manual of DB12.

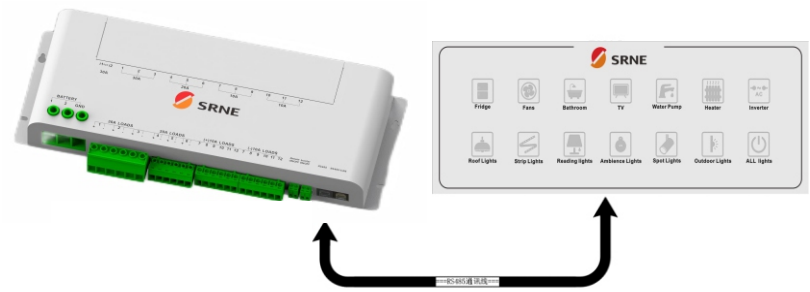

5.Specification Table

Product model number	RM12
Power consumption	≤20mA
Communication interface	RJ45
Means of communication	RS485
Baud rate	9.6kps
Operating temperature	-35℃~+65℃
Product dimensions	209mm*74.5mm*29.4mm
Product weight	230g
Installation method	Embedded installation

6.Main switch Usage

Touch switch	Touch mode	Describe
ALL lights	short press	Turn on/off all associated channels with one click (default channels 7 to 12), channel association can be set via the APP.
	Long press 3s	Sleep mode: Turn off the LED indicator lights on the touch control panel, keep the switch status unchanged, short press any switch to exit this mode.

7.Indicator light status

Indicator light color	Status	Status explanation
Blue - corresponds to the LED switch.	Constantly on	Corresponding switch is turned on normally.
	Extinguish	The corresponding switch is normally closed.
Red - corresponds to the LED switch.	Slow blink	Corresponding switch - such as battery over discharge, etc.
	Flash blink	Corresponding switch- Possible internal device component damage
Red- corresponds to the LED switch.	Single flash	DB12 Overcurrent load/DB12 temperature protection
	Slow blink	DB12 Battery over-discharge
	Flash blink	DB12 Battery overvoltage
	Constantly on	Communication abnormality
CH1 and CH2 show red	Slow blink	Db12 Power Limit Protection

8.Common problems and solutions

Phenomenon	Question and handling method
The panel indic ator light is not on.	Check if the communication wire sequence between the panel and the distribution box is correct and the contact is good, and whether the distribution box indicator lights are normally lit.
All red lights are on constantly, communication is abnormal.	Check the communication line between the device and the panel, or the panel does not support this model.

9.Suggestions and Precautions

Please carefully read all instructions and precautions in this manual upon receipt of the product to ensure its proper use.

♦This product needs to be used in conjunction with the DC distribution box DB12, please confirm with the business before purchasing this product.

♦Please do not place or install this product in environments exposed to direct sunlight, rain, heavy dust, high humidity, corrosive conditions, or strong electromagnetic interference.